Midwest Metal Fabricators, Ltd

712 Maple Street
Wapakoneta, OH 45895
(419) 739-7077/ph (419) 739-7079/fax

Customer: _____ MMF Job #: _____
Job Name: _____ Date: _____
PO Number: _____ Sheet #: _____ of _____
Date Req'd: _____ System: _____

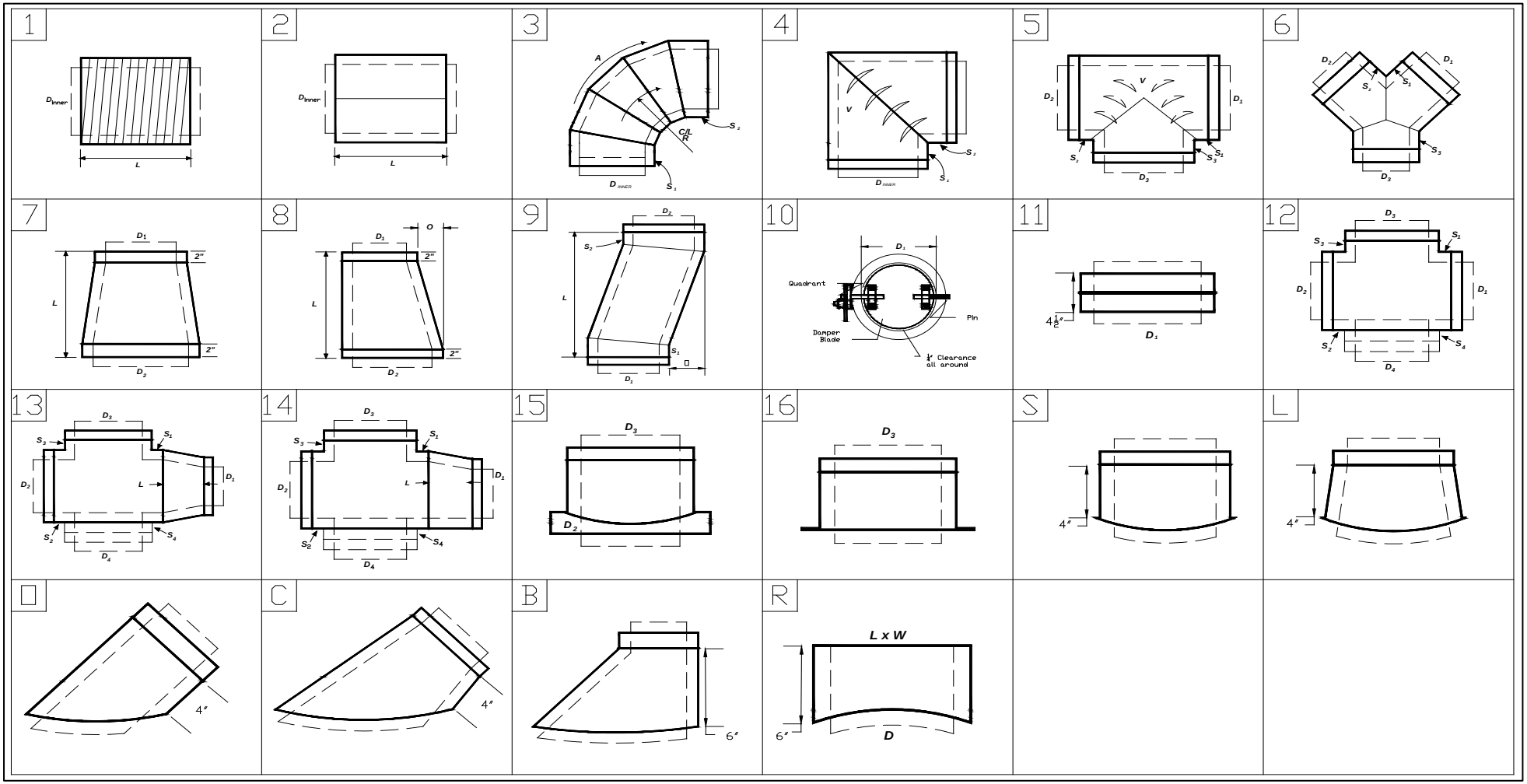

#	Qty	Type	Ga	D1	D2	D3	D4	S1	S2	S3	L	W	R	A	O	INS	END 1	END 2	Notes